Ambachtstraat 3, 4231 DP Meerkerk
Tel.: +31 183 74 52 10
Email: info@engel-trucks.com

Mercedes-Benz DK CREWCAB 4x2 3-WAY MEILLER KIPPER (MANUAL GEARBOX / FULL STEEL SUSPENSION / POWER STEERING / P.T.O.)

INFORMATIONS GÉNÉRALES

ID	SN 60935634
Année de construction	1993
Kilométrage	531.500 km
Chassis	Benne
Classe d'émission	1

INFORMATIONS TECHNIQUES

Date première immatriculation	02-01-1993
Carburant	Diesel
Transmission	Transmission manuelle
Configuration des essieux	4x2
Poids à vide	2.420 kg
Poids de la charge	3.180 kg
Poids maximum	5.600 kg
Nombre de cylindres	4
Puissance kw	63
Puissance hp	86
Empattement	370

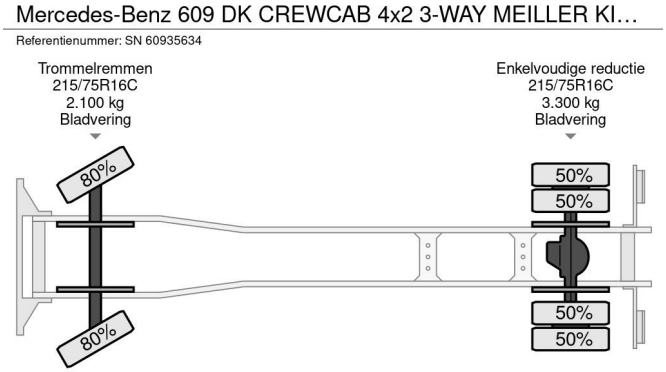

ACCESSOIRES

• Banquette conducteur • LAMES • Phare arrière • Prise de force • Prise de force (PTO) • Radio / lecteur CD

DESCRIPTION

GOOD CONDITION MERCEDES-BENZ 609DK 4x2 FULL STEEL MEILLER KIPPER, MANUAL GEARBOX, FULL STEEL SUSPENSION.!!
90 HP, 4 CILINDER ENGINE, NO ELECTRONICS (MECHANICAL PUMP AND INJECTORS)!!
MANUAL GEARBOX!!
FULL STEEL SUSPENSION!!
P.T.O.!!
HYDRAULIC KIT!!
ETC.!!

HEAVY DUTY MEILLER 3-WAY KIPPERBODY!!
SIZE; LENGTH x WIDE x HIGH Ca.: 3.15 m. x 2.25 m. x 0.45 m. (Ca. 5m3)!!

TRUCK IS IN GOOD WORKING AND DRIVING CONDITION, READY FOR THE KIPPER JOBS!!

MORE MERCEDES-BENZ 4x2 / 4x4 / 6x4 / 8x4 (CONSTRUCTION) TRUCKS IN STOCK FOR SALE!! (>75 TRUCKS/TRAILERS IN STOCK)!!

PLEASE CHECK OUR WEBSITE; WWW.ENGEL-TRUCKS.COM

SHIPMENT, STACKING, TRANSPORT OR LOADING?, NO PROBLEM FOR US, WE ARE AN " ONE STOP SHOP " COMPANY!!

YOU CAN ALSO CHECK OUR COMPANY MOVIE ON YOUTUBE FOR THE FIRST IMPRESSION!! (https://drone-pro.nl/project/video-engel-trucks-bv-2017/)

ENGEL TRUCKS; " YOUR GLOBAL TRADING PARTNER "

Ambachtstraat 3, 4231 DP Meerkerk
Tel.: +31 183 74 52 10
Email: info@engel-trucks.com