Ambachtstraat 3, 4231 DP Meerkerk
Tel.: +31 183 74 52 10
Email: info@engel-trucks.com

# Scania HL 6x2 FULL STEEL SUSPENSION BULK KIPPER (MANUAL GEARBOX / FULL STEEL SUSPENSION / 10 TIRES / 2x P.T.O. / LIFT-AXLE / ETC.)

## ALGEMENE INFORMATIE

| | |
|---|---|
| ID | SN 60911466 |
| Bouwjaar | 1992 |
| Tellerstand | 129.500 km |
| Opbouw | Kipper |
| Emissieklasse | 2 |

## TECHNISCHE INFORMATIE

| | |
|---|---|
| Datum eerste toelating | 14-10-1992 |
| Brandstof | Diesel |
| Transmissie | Handgeschakeld |
| Voertuigidentificatienummer | XLERH6X2Z04321466 |
| Asconfiguratie | 6x2 |
| Ledig gewicht | 11.700 kg |
| Laadgewicht | 15.800 kg |
| Max. gewicht | 27.500 kg |
| Aantal cilinders | 6 |
| Vermogen in kW | 265 |
| Vermogen in pk | 360 |
| Wielbasis | 460 |

Scania R113-360 HL 6x2 FULL STEEL SUSPENSION BULK...

Referentienummer: SN 60911466

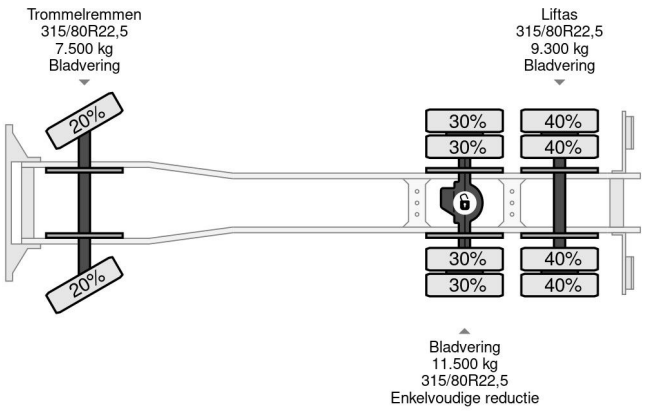


## ACCESSOIRES

• 10 Versnellingen handgeschakeld • 40mm. Vangmuil • 400 Liter brandstoftank • ABS • Aftakas (PTO) • BLADGEVEERD • Differentieelblokkering • Hydraulic set • Lift-as • Luxe chauffeurstoel • PTO • PTO • Radio/CD speler • Snelheidsbegrenzer • Sperdifferentieel • Spiegelverwarming • TROMMEL REMMEN • Vangmuil • Verwarmde buitenspiegels • Zonneklep • Zwaailicht

## BESCHRIJVING

NICE, CLEAN & GOOD WORKING CONDITION, SCANIA R113-360HL 6x2 BULK KIPPER WITH BLOWER, FULL STEEL SUSPENSION, 10 TIRES & MANUAL GEARBOX!!
360HP, EURO 2, 6 CILINDER ENGINE (MECHANICAL PUMP & INJECTORS)!!
10 GEARS MANUAL GEARBOX!!
FULL STEEL SUSPENSION!!
10 TIRES!!
2x P.T.O.!!
SUNVISOR!!
ETC.!!

OVA ALUMNIUM BILK KIPPER; LENGTH x WIDE x HIGH: Ca. 7.10 x 2.45 x 2.15 M. (Ca. 38 M3)!!
BLOWER!!
BACK DOORS!!
4 ADJUSTABLE COMPARTMENTS!!

TRUCK IS IN NICE AND GOOD WORKING / DRIVING CONDITION, READY FOR THE JOB!!

MORE SCANIA 4x2 / 6x2 / 6x4 / 8x4 (CONSTRUCTION) TRUCKS IN STOCK FOR SALE!! (>75 TRUCKS/TRAILERS IN STOCK)!!

PLEASE CHECK OUR WEBSITE; WWW.ENGEL-TRUCKS.COM

SHIPMENT, STACKING, TRANSPORT OR LOADING?, NO PROBLEM FOR US!, WE ARE AN " ONE STOP SHOP " COMPANY!!

YOU CAN CHECK ALSO OUR COMPANY MOVIE ON YOUTUBE FOR THE FIRST IMPRESSION!! ( https://drone-pro.nl/project/video-engel-trucks-bv-2017/ )

ENGEL TRUCKS; " YOUR GLOBAL TRADING PARTNER "

Ambachtstraat 3, 4231 DP Meerkerk
Tel.: +31 183 74 52 10
Email: info@engel-trucks.com