Ambachtstraat 3, 4231 DP Meerkerk
Tel.: +31 183 74 52 10
Email: info@engel-trucks.com

Mercedes-Benz D WITH TENT BOX (MANUAL GEARBOX / FULL STEEL SUSPENSION / LOADING PLATFORM / ALUMINIUM SIDE BORDS)

GENERAL INFORMATION

ID	SN 60920227
Year	1980
Mileage	282.000 km
Construction	Tarpaulin
Emissionclass	1

TECHNICAL INFORMATION

First registration date	15-05-1980
Fuel	Diesel
Transmission	Manual
Axle configuration	4x2
Weight	3.780 kg
Load capacity	3.710 kg
Gross weight	7.490 kg
Cylinder count	4
Power kw	63
Power hp	86
Wheelbase	360
Length	625 cm
Width	234 cm
Height	243 cm

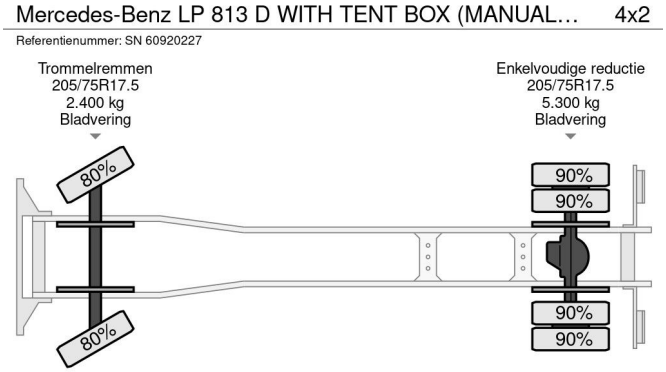

ACCESSORIES

• 5 Gears manual gearbox • Radio/CD player • STEEL SUSPENSION

DESCRIPTION

Tail lift: DAUTEL, tail lift, 750 kg

NICE & CLEAN CONDITION MERCEDES-BENZ LP813D 4x2 FULL STEEL WITH TENT BOX, ALUMINIUM SIDE BORDS & LOADING PLATFORM!!
130 HP, 4 CILINDER ENGINE, NO ELECTRONICS (MECHANICAL PUMP AND INJECTORS)!!
MANUAL GEARBOX!!
FULL STEEL SUSPENSION!!
ETC.!!

TENT BOX; SIZE; LENGTH x WIDE x HIGH Ca.: 4.55 m. x 2.27 m. x 1.80 m.!!
LOADING PLATFORM!!
70 cm. ALUMINIUM SIDE BORDS!!

TRUCK IS IN NICE, CLEAN AND GOOD DRIVING

CONDITION, READY FOR THE JOB!!

MORE MERCEDES-BENZ 4x2 / 4x4 / 6x4 / 8x4 (CONSTRUCTION) TRUCKS IN STOCK FOR SALE!! (>75 TRUCKS/TRAILERS IN STOCK)!!

PLEASE CHECK OUR WEBSITE; WWW.ENGEL-TRUCKS.COM

SHIPMENT, STACKING, TRANSPORT OR LOADING?, NO PROBLEM FOR US, WE ARE AN " ONE STOP SHOP " COMPANY!!

YOU CAN ALSO CHECK OUR COMPANY MOVIE ON YOUTUBE FOR THE FIRST IMPRESSION!! (https://drone-pro.nl/project/video-engel-trucks-bv-2017/)

ENGEL TRUCKS; " YOUR GLOBAL TRADING PARTNER "

Ambachtstraat 3, 4231 DP Meerkerk
Tel.: +31 183 74 52 10
Email: info@engel-trucks.com